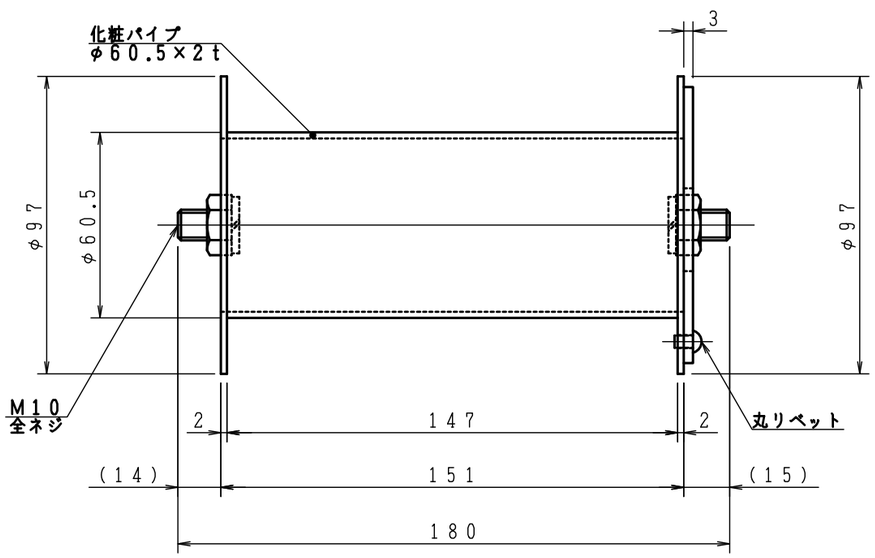

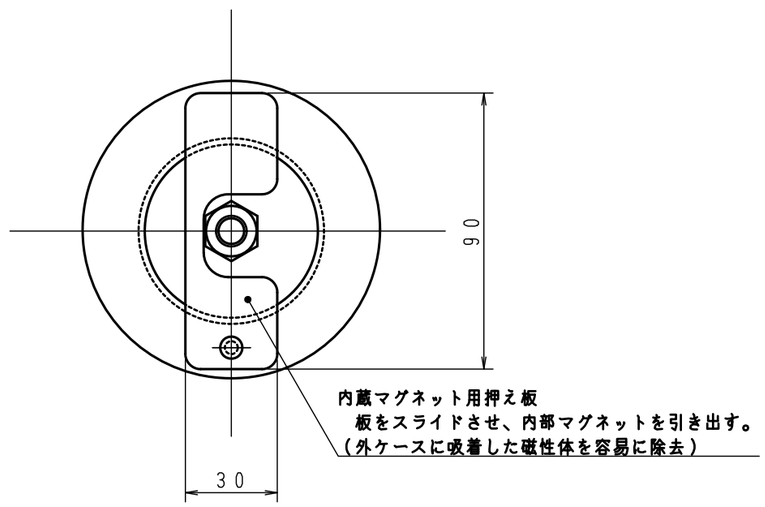

DRAWING NO.				QUANTITY		DIVISION MANEGER		CUSTOMER	
TITLE	除鉄用 マグネットボビン					SECTION MANEGER		CUSTOMER DRAWING NO.	
						CHECK OF DRAWING		A REMARKS COLUMN	
						DRAWING		DATE / IDENTITY	REMARKS
						DESIGN			
CAD NO.				WEIGHT	約2.9kg	PERSON IN CHARGE			
PROJECTION	THIRD ANGLE PROJECTION	SCALE	1/2	DATE	2023/08/24	SANSHIN KINZOKU KOGYO CO., LTD.			